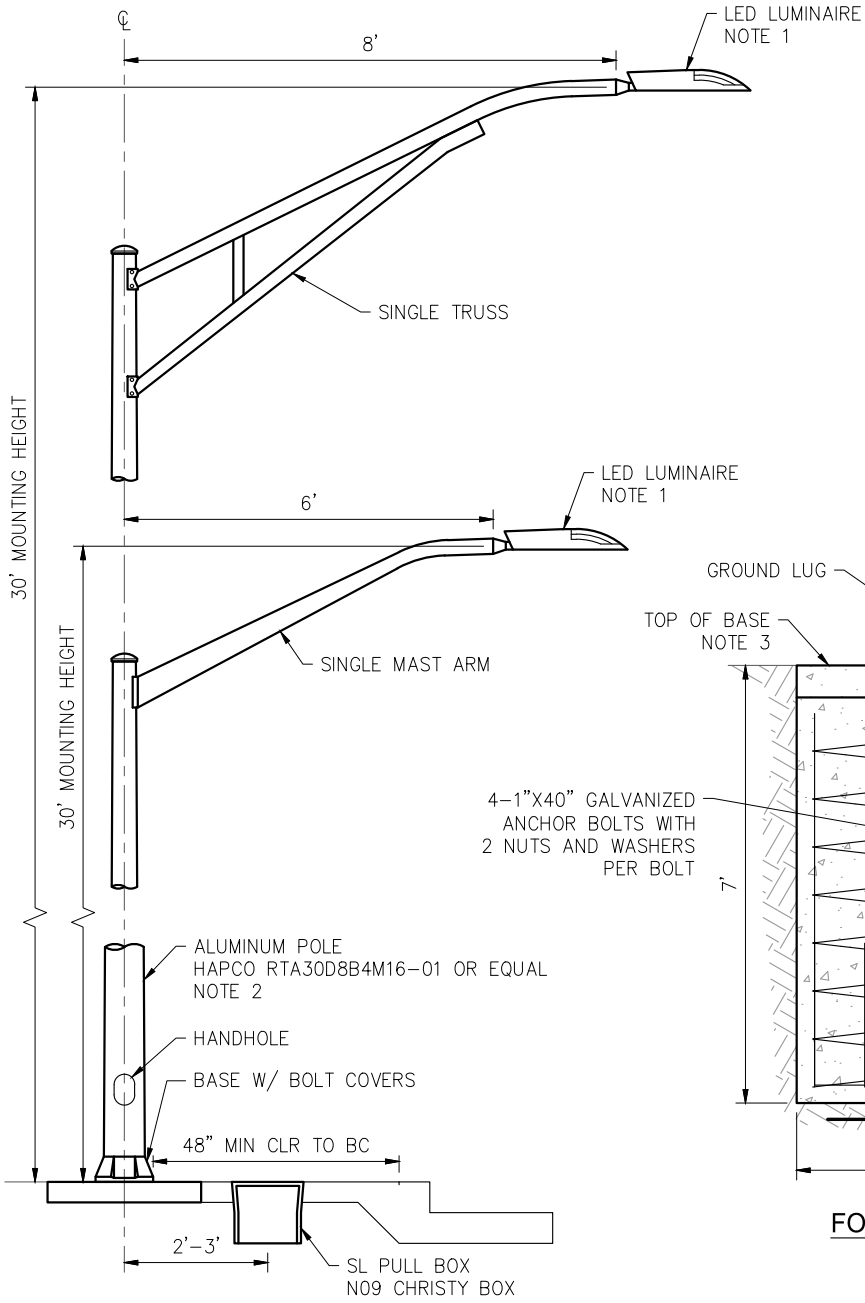

POLE ELEVATION

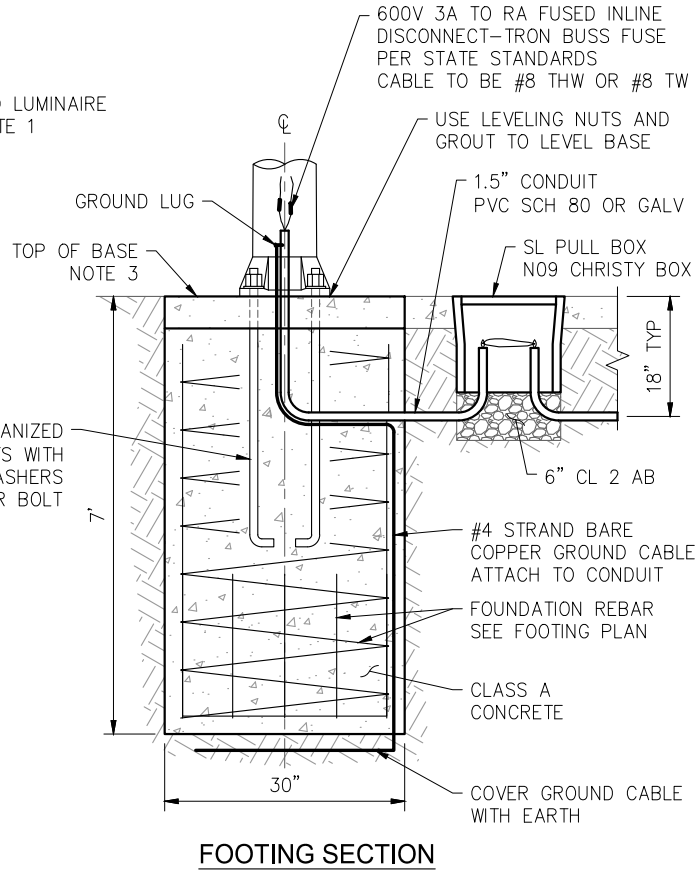

FOOTING SECTION

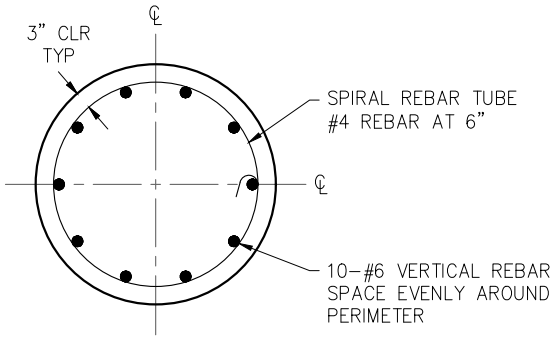

FOOTING PLAN

NOTES:

1. LUMINAIRES SHALL BE LED MODEL CREE GUIDEWAY AS DIRECTED BY THE ELECTRICAL DIVISION. CONFIRM WITH THE ELECTRICAL DIVISION PRIOR TO ORDERING MATERIALS.
2. STREET LIGHT POLE SHALL BE HAPCO ALUMINUM SATIN FINISH OR EQUAL UNLESS OTHERWISE APPROVED BY THE PLANNING DIVISION. MAST ARM TYPE SHALL BE PER THE ELECTRICAL DIVISION DIRECTION.
3. STREET LIGHT PULL BOX SHALL BE N09 CHRISTY BOX IMPRINTED WITH "STREET LIGHT" ON THE LID.
4. WHERE STREET LIGHT IS BEING INSTALLED WITHIN NEW SIDEWALK, THE TOP 4" OF THE FOUNDATION SHALL BE POURED MONOLITHIC WITH THE SIDEWALK.
5. REFER TO CALTRANS STANDARD PLANS FOR ANY OTHER APPLICABLE DETAILS NOT COVERED BY THIS SHEET.

SOUTH SAN FRANCISCO PUBLIC WORKS ENGINEERING	**STANDARD ELECTROLIER**	**JULY 2026**
		E-1