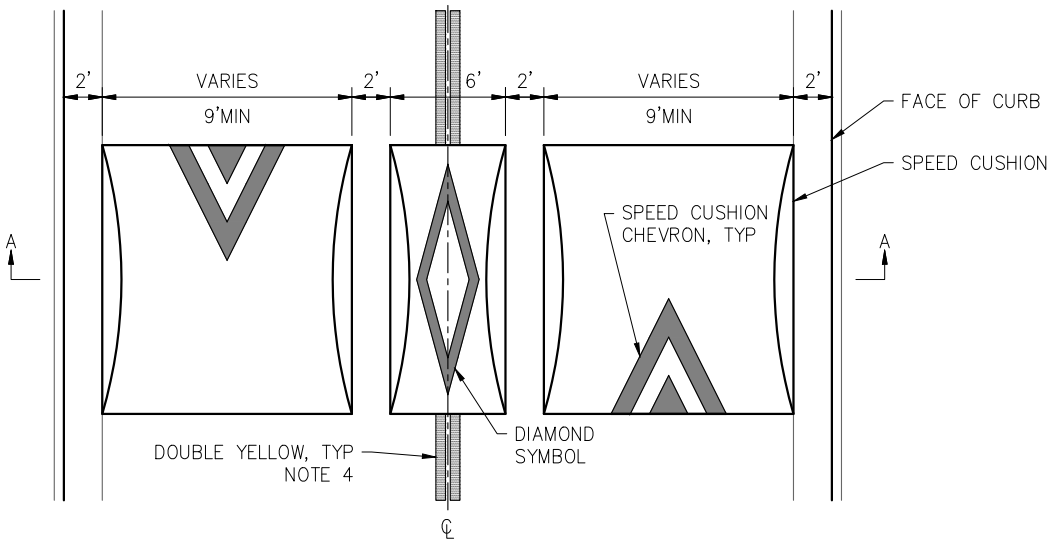

PLAN VIEW

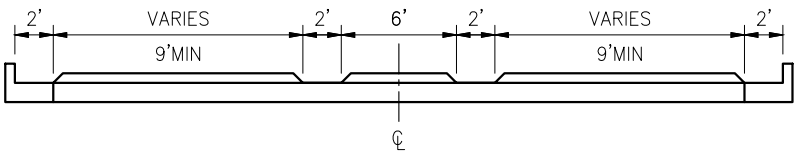

SECTION A–A

SPEED CUSHIONS (STANDARD ROW)

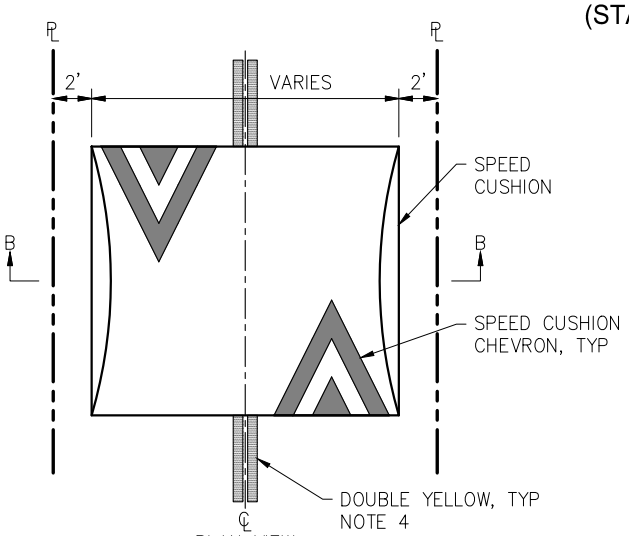

PLAN VIEW

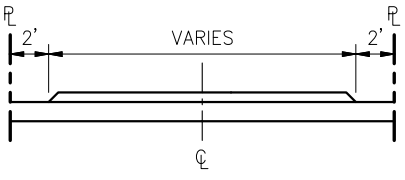

SECTION B–B

SPEED CUSHIONS (LIMITED ROW)

NOTES:

1. ALL STRIPING SHALL BE WHITE THERMOPLASTIC PAINT WITH GLASS BEADING.
2. SPEED CUSHIONS SHALL EXTEND TO THE LIP OF GUTTER OR 2–FT FROM EDGE OF PAVEMENT WHERE NO GUTTER EXISTS.
3. SPEED CUSHION CHEVRON SHALL BE INSTALLED ON THE SIDE FACING THE FLOW OF TRAFFIC AND CENTERED ON THE TRAVEL LANE.
4. FOR ROADS WITH TWO–WAY TRAFFIC, A DOUBLE YELLOW CENTERLINE (CALTRANS DETAIL 21) SHALL BE PAINTED 100–FT IN ADVANCE OF THE SPEED CUSHIONS MEASURED TO THE EDGE OF THE SPEED CUSHIONS, ON BOTH SIDES FOR THE APPROACH AND DEPARTURE IN THE SAME TRAVEL DIRECTION. ALTERNATIVELY, A DOUBLE YELLOW CENTERLINE WITH TWO–WAY YELLOW RETRO–REFLECTIVE MARKERS (CALTRANS DETAIL 22) SHALL BE APPLIED IN A SIMILAR FASHION FOR ROADS WITH MINIMAL OR NO STREET LIGHTING OR AS DETERMINED BY THE CITY ENGINEER.
5. SIGNAGE SHALL BE INSTALLED FOR ALL SPEED CUSHIONS PER DETAIL R–12B.
6. ADVANCED SPEED CUSHION WARNING STRIPING SHALL BE INSTALLED AT THE DIRECTION OF THE CITY ENGINEER, PER DETAIL R–12B.

SOUTH SAN FRANCISCO PUBLIC WORKS ENGINEERING	**SPEED CUSHIONS LAYOUT**	**JULY 2026**
		R-12A