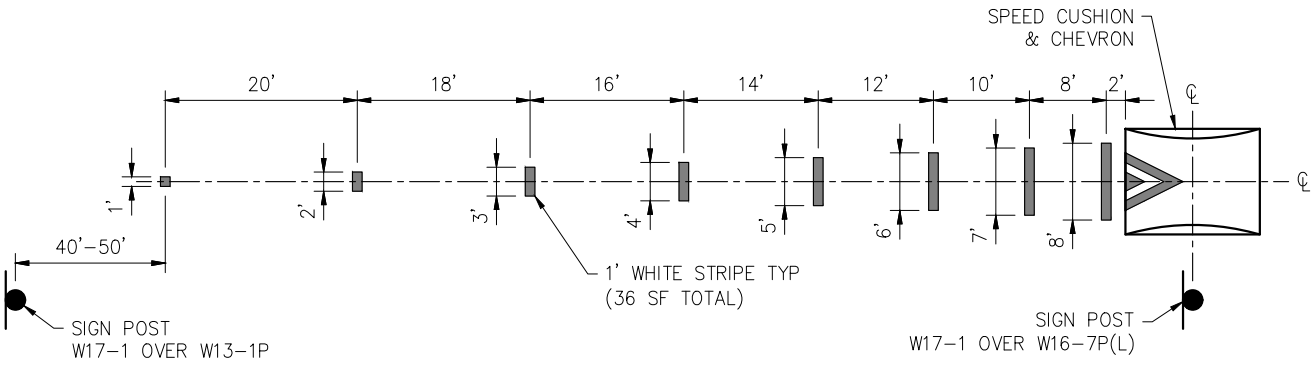

ADVANCED SPEED CUSHION WARNING

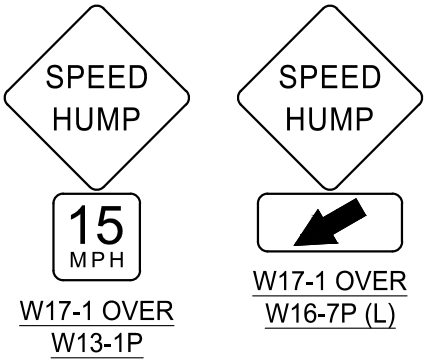

W17-1 OVER W13-1P

W17-1 OVER W16-7P (L)

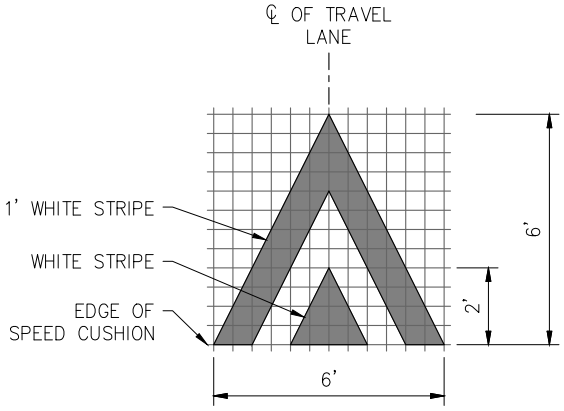

SPEED CUSHION CHEVRON

A= 12 SF

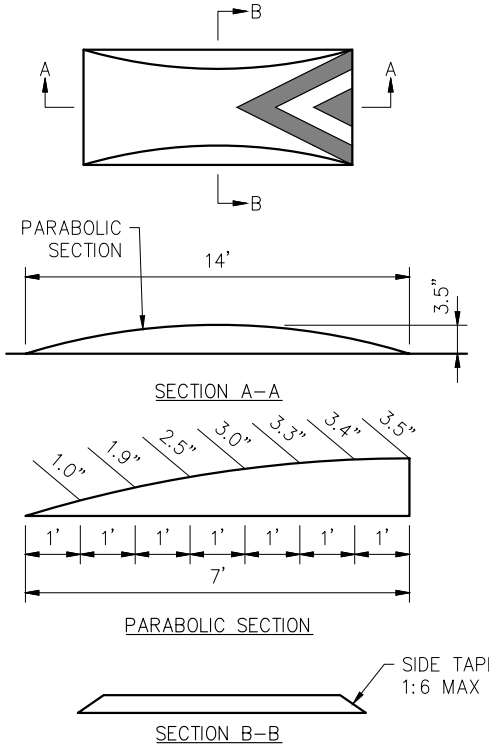

SPEED CUSHION

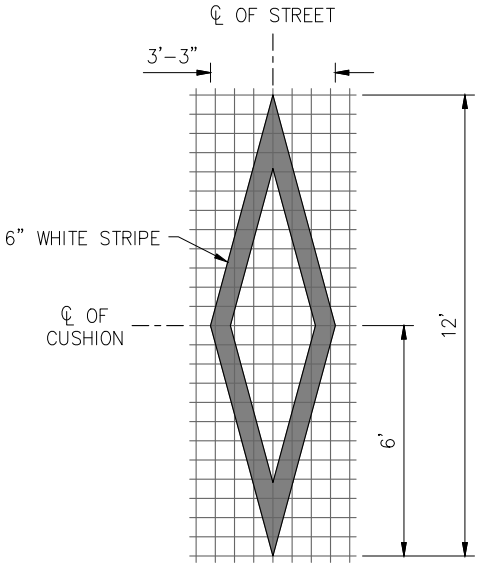

DIAMOND SYMBOL

A= 10.5 SF

NOTES:

1. ALL STRIPING SHALL BE WHITE THERMOPLASTIC PAINT WITH GLASS BEADING.

SOUTH SAN FRANCISCO PUBLIC WORKS ENGINEERING	**SPEED CUSHIONS DETAILS**	JULY 2026
		R-12B