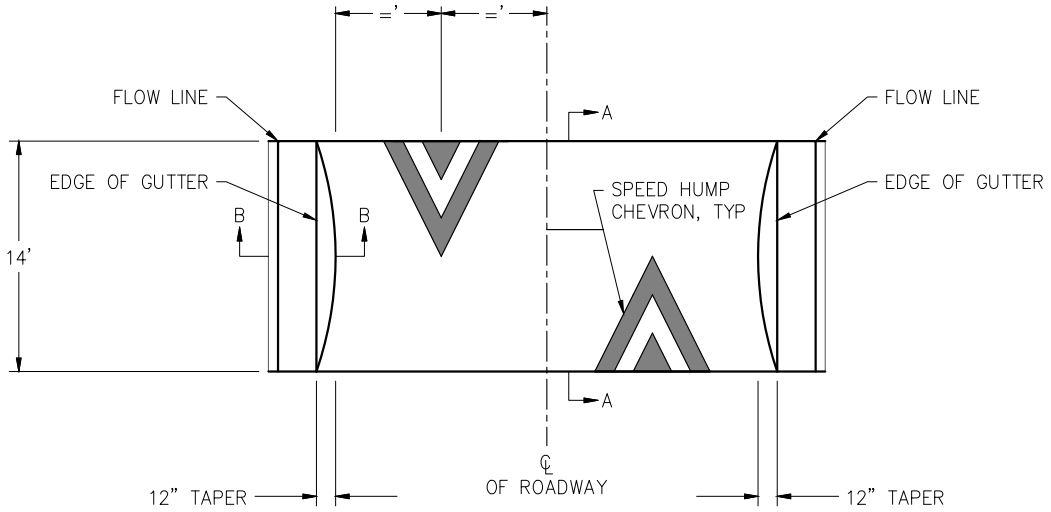

PLAN VIEW

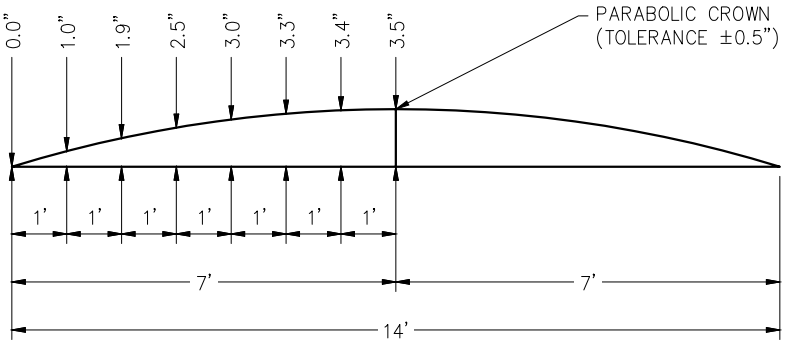

SECTION A–A

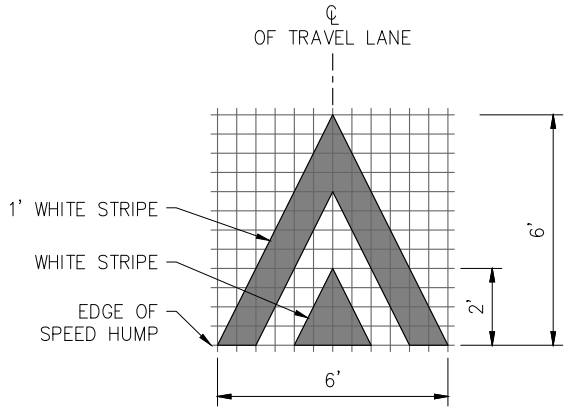

SPEED HUMP CHEVRON

A= 12 SF

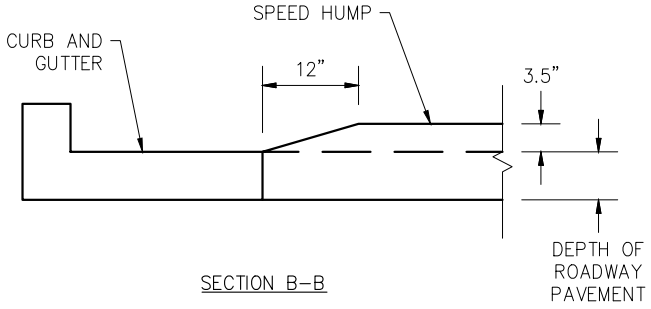

SECTION B–B

NOTES:

1. ALL STRIPING SHALL BE WHITE THERMOPLASTIC WITH GLASS BEADING.
2. SPEED HUMP TAPERS SHALL EXTEND TO THE LIP OF GUTTER OR EDGE OF PAVEMENT.
3. SIGNAGE AND PAVEMENT MARKINGS MAY BE INSTALLED FOR ALL SPEED HUMPS PER DETAIL R–12B.

SOUTH SAN FRANCISCO PUBLIC WORKS ENGINEERING	**SPEED HUMPS**	**JULY 2026**
		R-12C